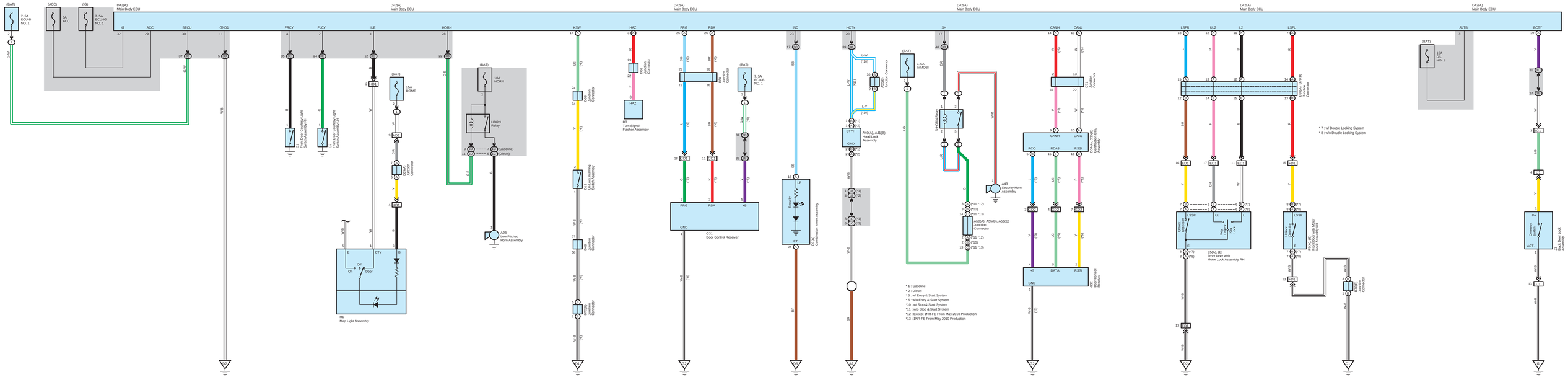

(BAT)
7.5A
ECU-B
NO. 1
(ACC)
5A
ACC
(IG)
7.5A
ECU-IG
NO. 1
D42(A)
Main Body ECU
IG
ACC
BECU
GND1
FRCY
FLCY
ILE
HORN
KSW
HAZ
PRG
RDA
IND
HCTY
SH
CANH
CANL
LSFR
LU2
L2
LSFL
ALTB
BCTY
15A
DOME
10A
HORN
HORN
Relay
(Gasoline)
(Diesel)
A23
Low Pitched
Horn Assembly
H1
Map Light Assembly
D3
Turn Signal
Flasher Assembly
G31
Door Control Receiver
A40(A), A41(B)
Hood Lock
Assembly
A50(A), A55(B), A56(C)
Junction
Connector
A43
Security Horn
Assembly
G12
Door Control
Receiver
E5(A), (B)
Front Door with
Motor Lock Assembly RH
F5(A), (B)
Front Door with Motor
Lock Assembly LH
15A
DIL
NO. 1
A3
Bus Door Lock
Actuator
* 1 : Gasoline
* 2 : Diesel
* 5 : w/ Entry & Start System
* 6 : w/o Entry & Start System
*10 : w/ Stop & Start System
*11 : w/o Stop & Start System
*12 : Except 1NR-FE From May 2010 Production
*13 : 1NR-FE From May 2010 Production
* 7 : w/ Double Locking System
* 8 : w/o Double Locking System